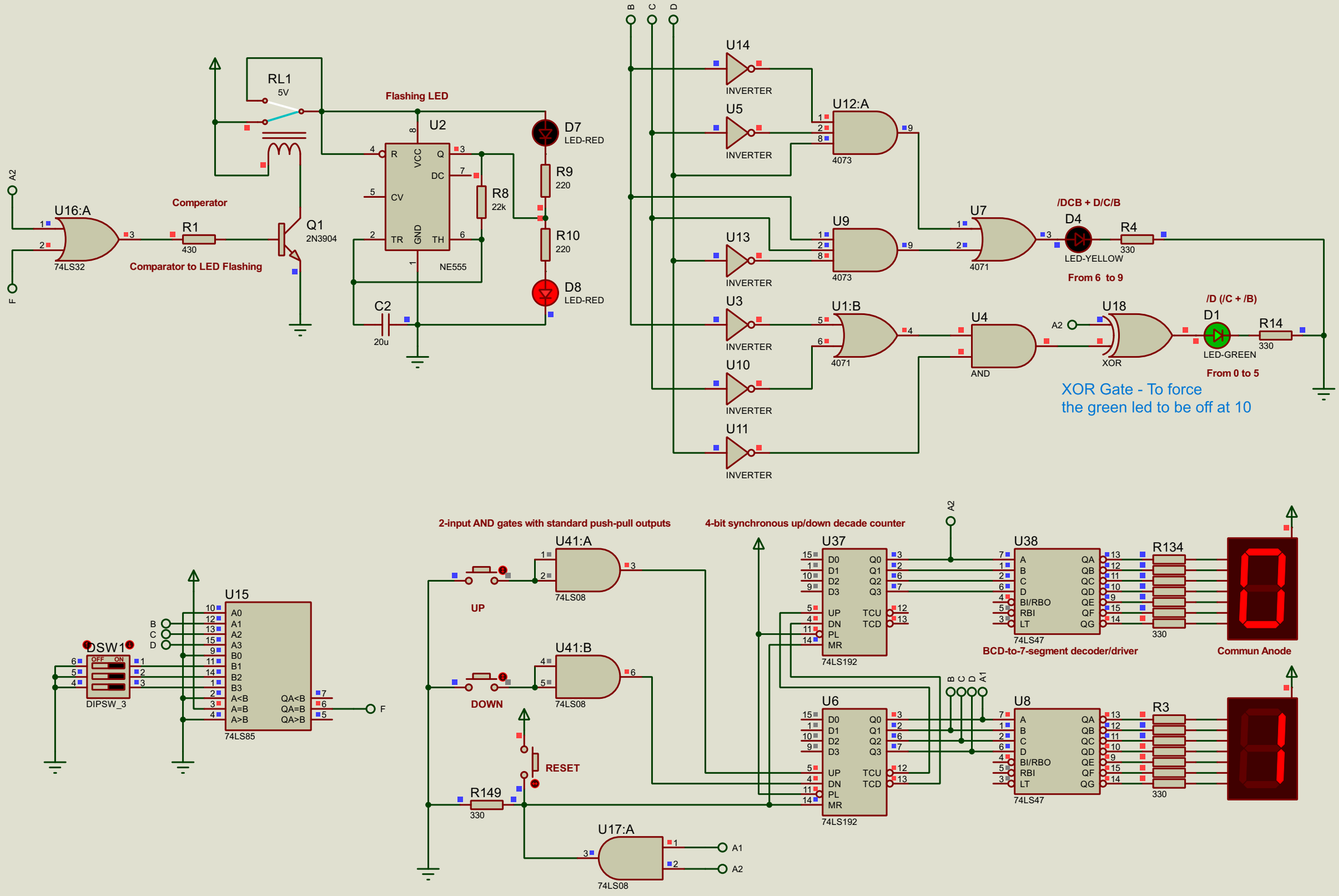
RL1
5V
Flashing LED
U2
NE555
R
VCC
Q
DC
CV
TR
GND
TH
D7
LED-RED
R9
220
R8
22k
R10
220
D8
LED-RED
C2
20u
A2
U16:A
74LS32
F
Comperator
R1
430
Q1
2N3904
Comparator to LED Flashing
B
C
D
U14
INVERTER
U5
INVERTER
U12:A
4073
U13
INVERTER
U9
4073
U3
INVERTER
U1:B
4071
U10
INVERTER
U11
INVERTER
U7
4071
/DCB + D/C/B
D4
LED-YELLOW
R4
330
From 6 to 9
U4
AND
A2
U18
XOR
/D (/C + /B)
D1
LED-GREEN
R14
330
From 0 to 5
XOR Gate - To force
the green led to be off at 10
DSW1
DIPSW_3
U15
74LS85
A0
A1
A2
A3
B0
B1
B2
B3
A<B
A=B
A>B
QA<B
QA=B
QA>B
2-input AND gates with standard push-pull outputs
U41:A
74LS08
UP
U41:B
74LS08
DOWN
RESET
R149
330
U17:A
74LS08
A1
A2
to make it reset at 11 and 99
4-bit synchronous up/down decade counter
U37
74LS192
U6
74LS192
D0
D1
D2
D3
Q0
Q1
Q2
Q3
UP
DN
PL
MR
TCU
TCD
U38
74LS47
U8
74LS47
A
B
C
D
BI/RBO
RBI
LT
QA
QB
QC
QD
QE
QF
QG
BCD-to-7-segment decoder/driver
R134
330
R3
330
Commun Anode